Instruction

Collection: ELEGANT
Series: BAROQUE
Model: ARM128-WL-01-W
Wall

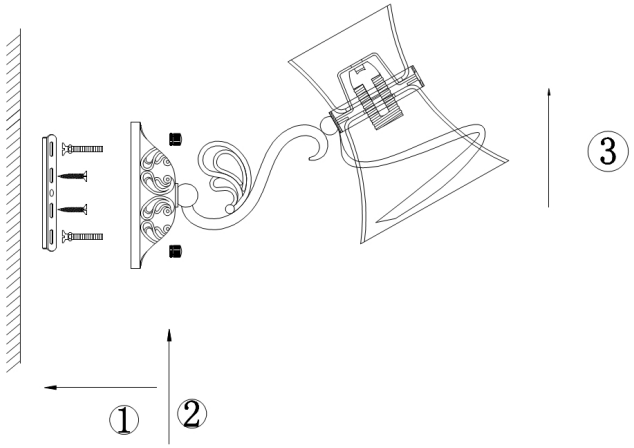

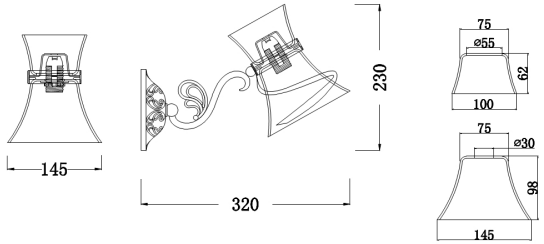

- Wall

1 x E14 (60W)

MAYTONI
DECORATIVE LIGHTING

www.maytoni.de